Technical Document – Confidential

GSM PROTOCOL STACK

TEST SPECIFICATION

EOTD-CONTROLLER

Document Number:	8443.406.02.001
Version:	0.2
Status:	Draft
Approval Authority:	
Creation Date:	2002-Sep-23
Last changed:	2015-Mar-08 by XGUTTEFE
File Name:	lc.doc

Copyright © 2003 Texas Instruments
Texas Instruments Proprietary Information – Internal Data

Important Notice

Texas Instruments Incorporated and/or its subsidiaries (TI) reserve the right to make corrections, modifications, enhancements, improvements, and other changes to its products, software and services at any time and to discontinue any product, software or service without notice. Customers should obtain the latest relevant information during product design and before placing orders and should verify that such information is current and complete.

All products are sold subject to TI's terms and conditions of sale supplied at the time of order acknowledgment. TI warrants performance of its hardware products to the specifications applicable at the time of sale in accordance with TI's standard warranty. Testing and other quality control techniques are used to the extent TI deems necessary to support this warranty. Except where mandated by government requirements, testing of all parameters of each product is not necessarily performed.

TI assumes no liability for applications assistance or customer product design. Customers are responsible for their products and applications using TI products, software and/or services. To minimize the risks associated with customer products and applications, customers should provide adequate design, testing and operating safeguards.

Any access to and/or use of TI software described in this document is subject to Customers entering into formal license agreements and payment of associated license fees. TI software may solely be used and/or copied subject to and strictly in accordance with all the terms of such license agreements.

Customer acknowledges and agrees that TI products and/or software may be based on or implement industry recognized standards and that certain third parties may claim intellectual property rights therein. The supply of products and/or the licensing of software does not convey a license from TI to any third party intellectual property rights and TI expressly disclaims liability for infringement of third party intellectual property rights.

TI does not warrant or represent that any license, either express or implied, is granted under any TI patent right, copyright, mask work right, or other TI intellectual property right relating to any combination, machine, or process in which TI products, software or services are used.

Information published by TI regarding third–party products, software or services does not constitute a license from TI to use such products, software or services or a warranty, endorsement thereof or statement regarding their availability. Use of such information, products, software or services may require a license from a third party under the patents or other intellectual property of the third party, or a license from TI under the patents or other intellectual property of TI.

No part of this document may be reproduced or transmitted in any form or by any means, electronically or mechanically, including photocopying and recording, for any purpose without the express written permission of TI.

Change History

Date	Changed by	Approved by	Version	Status	Notes
2002-Sep-23	MNC		0.1		1
2003-May-19	XGUTTEFE		0.2	Draft	

Notes:

1. Initial version

Table of Contents

1.1 References 4
1.2 Abbreviations 4
1.3 Terms 5

2 Overview 5

3 Parameters 6

4 TEST CASES 17

4.1 Internal Routing 17
4.1.1 LC000: Configure internal routing and PCO view 17
4.1.2 LC001: Configure internal routing and PCO view 18
4.2 Position Request 18
4.2.1 LC002: EOTD-Controller1: Position calculation (only for test) 18
4.2.2 LC003: EOTD-Controller1: (only for test) 20
4.2.3 LC004: EOTD-Controller1: Position calculation 22
4.2.4 LC005: EOTD-Controller1: RRLP request no measurement data 23
4.2.5 LC006: EOTD-Controller1: Position calculation 24
4.2.6 LC007: EOTD-Controller1: RRLP request location method not supported 26
4.2.7 LC008: EOTD-Controller1: RRLP request serving BTS not reference BTS 27
4.2.8 LC009: EOTD-Controller1: RRLP request handover during measurements. 28
4.2.9 LC010: EOTD-Controller1: Position calculation 28
4.2.10 LC011: EOTD-Controller1: RRLP request no measurement data 29

Appendices 32

A. Acronyms 32
B. Glossary 32

List of Figures and Tables

List of References

[ISO 9000:2000] International Organization for Standardization. Quality management systems - Fundamentals and vocabulary. December 2000

1.1 References

[3GPP_03.71] Digital cellular telecommunications system (Phase 2+), Location services (LCS), (Functional description) - Stage 2, (V8.5.0 Release 1999)

[3GPP_04.18] 3rd Generation Partnership Project; Technical Specification Group GSM/EDGE Radio Access Network; Mobile radio interface layer 3 specification, Radio Resource Control Protocol, (V8.13.0 Release 1999)

[3GPP_04.31] 3rd Generation Partnership Project; Technical Specification Group GSM EDGE Radio Access Network; Location Services (LCS); Mobile Station (MS) – Serving Mobile Location Centre (SMLC); Radio Resource LCS Protocol (RRLP), (V8.8.0 Release 1999)

[3GPP_24.007] 3rd Generation Partnership Project; Technical Specification Group Core Network; Mobile radio interface signalling layer 3; (V3.8.0 Release 1999)

[3GPP_24.030] 3rd Generation Partnership Project; Technical Specification Group Core Network; Location Services (LCS); Supplementary service operations - Stage 3), (V3.3.0 Release 1999)

[3GPP_22.071] 3rd Generation Partnership Project; Technical Specification Group services and System aspects; Location services (LCS); Service description; Stage 1 (V3.4.0 Release 1999)

http://www.fcc.gov/911/enhanced/ For further information of E911 requirements.

[X.209] ITU-T Recommendation X.209: "Specification of Abstract Syntax Notation One (ASN.1)

[CU 0107] CPS - GSM Cursor™ Mobile Terminal Requirements, Full Specification – Issue 4.2

[CU 0115] CPS - GSM Cursor™ Mobile Terminal Requirements, MMI Specification – Issue 1.1

[CU 0126] CPS - GSM Cursor™ Mobile Terminal Requirements, AT Commands for Feature Control – Issue 3.3

[CU 0149] CPS - GSM Cursor™ Enhanced Observed Time Difference, (Software implementation project) – Issue 3.0

[CU 0305] CPS - GSM Cursor™ Mobile Terminal Requirements, Cursor™ Task Bridge Description – Issue 1.3

[TI S922] L1/RR interface for neighbour cells monitoring (Idle mode) and EOTD

[8353.507] UELCS Requirements for Location Services in a UE – Requirement Analysis

[4711.005.02] G23-GPRS Protocol Stack Release 1.4.0, Product Specification, May 2002

[4711.020.02] G23-GPRS Protocol, E-OTD Lower Level Design LC, August 2002

[4711.021.02] G23-GPRS Protocol, E-OTD Lower Level Design RR, August 2002

[TI 7010.801] 7010.801, References and Vocabulary, Texas Instruments

[C_7010.801] 7010.801, References and Vocabulary, Condat AG

1.2 Abbreviations

ACI	Application Control Interface (AT Commands)
AL	Application Layer
APDU	Application Protocol Data Unit
CBCH	Common Broadcast CHannel
CPS	Cambridge Positioning System
DTAP	Direct Transfer Application Part
E-OTD	Enhanced Observed Time Difference positioning method
LCS	Location Services
LC	Location Service handling Entity
LR	Location Request

NA-ESRD	North American Emergency Services Routing Digits
NA-ESRK	North American Emergency Services Routing Key
PS	Protocol Stack
RRLP	Radio Resource Location Service Protocol
SMLC	Serving Mobile Location Center

1.3 Terms

Entity:	Program which executes the functions of a layer
Message:	A message is a data unit which is transferred between the entities of the same layer (peer-to-peer) of the mobile and infrastructure side. Message is used as a synonym to protocol data unit (PDU). A message may contain several information elements.
Primitive:	A primitive is a data unit which is transferred between layers on one component (mobile station or infrastructure). The primitive has an operation code which identifies the primitive and its parameters.
Service Access Point:	A Service Access Point is a data interface between two layers on one component (mobile station or infrastructure).

2 Overview

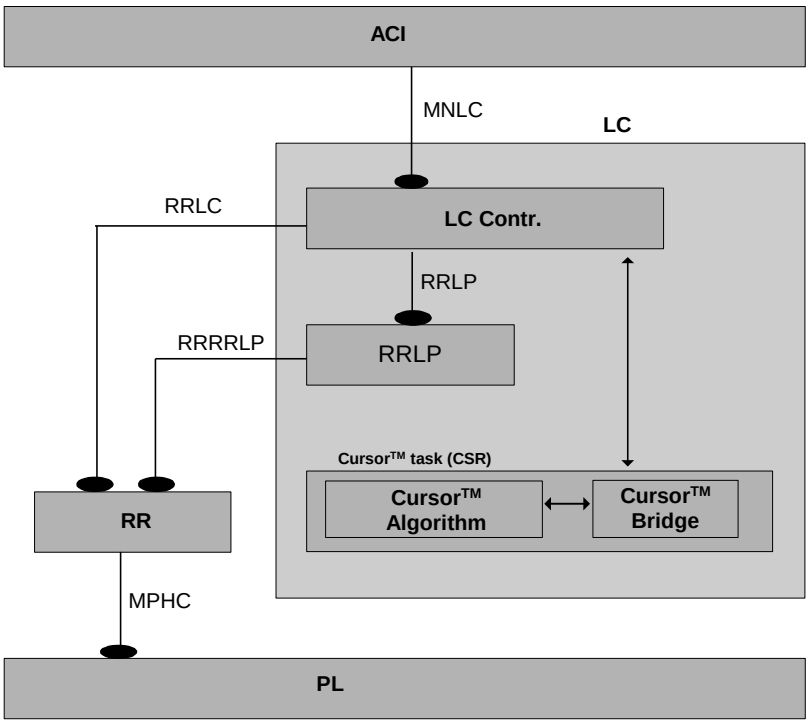

Figure 1: LC details

Figure 1 shows the details of the Cursor ™ task as provided by CPS. It consists of two parts, the Cursor ™ Algorithm and the Cursor ™ Bridge code. To have a more generic approach for further developments, the LC controller co-ordinates the positioning requests to the appropriate implementation, e.g. E-OTD or GPS. Texas Instruments will develop the LC controller and the RRLP. The Cursor ™ Bridge code is available in source code, representing

the interface between the LC controller and the Cursor ™ Algorithm. It is used to exemplify the data handling between the modules but can be adapted to the Texas Instruments needs. The Cursor ™ Algorithm module is provided in object code, receiving the correlation data and BTS identifier and calculates precise OTD values. The Cursor ™ Algorithm remains property of CPS and will not be part of the Protocol Stack software release. The data handling is taking place inside RRLP or ACI (only during test phase 1 & 2 or for further implementations of assistance data). All point-to-point data, e.g. assistance data from the network and the location response from the MS, are handled by RRLP. General positioning data, e.g. assistance data to all mobiles in a cell, might be distributed via CBCH and is then transported via ACI to the LC. The interface between LC controller and RRLP is primitive based with functional character in order to run RRLP in another task context, e.g. RR.

3 Parameters

```
/* DECLARATION  */
DECLARATION (BCD_NUMBER)          /* */
DECLARATION (MAX_BCD_LENGTH)      /* */
DECLARATION (SMS_TEXT)            /* */
DECLARATION (EOTD_SC_RES)         /* */
DECLARATION (EOTD_SC_RES1)        /* */
DECLARATION (EOTD_NC_RES_1)       /* */
DECLARATION (EOTD_NC_RES_2)       /* */
DECLARATION (EOTD_NC_RES_3)       /* */
DECLARATION (EOTD_NC_RES_4)       /* */
DECLARATION (EOTD_NC_RES_5)       /* */
DECLARATION (EOTD_NC_RES_6)       /* */
DECLARATION (EOTD_NC_RES_7)       /* */
DECLARATION (EOTD_NC_RES_8)       /* */
DECLARATION (EOTD_NC_RES_9)       /* */
DECLARATION (EOTD_NC_RES_10)      /* */
DECLARATION (EOTD_NC_RES_11)      /* */
DECLARATION (EOTD_NC_RES_12)      /* */
DECLARATION (ASSIST_DATA_1)       /* */
DECLARATION (ASSIST_DATA_2)       /* */
DECLARATION (ASSIST_DATA_3)       /* */
DECLARATION (ASSIST_DATA_4)       /* */
DECLARATION (ASSIST_DATA_5)       /* */
DECLARATION (ASSIST_DATA_6)       /* */
DECLARATION (ASSIST_DATA_7)       /* */
DECLARATION (ASSIST_DATA_8)       /* */
DECLARATION (ASSIST_DATA_9)       /* */
DECLARATION (ASSIST_DATA_10)      /* */
DECLARATION (ASSIST_DATA_11)      /* */
DECLARATION (ASSIST_DATA_12)      /* */
DECLARATION (ASSIST_DATA_13)      /* */
DECLARATION (ASSIST_DATA_14)      /* */
DECLARATION (ASSIST_DATA_15)      /* */
DECLARATION (TIMING_DATA)         /* */
DECLARATION (EXOR_NO)             /**/
DECLARATION (MNC)                 /* */
DECLARATION (MCC)                 /* */
DECLARATION (EOTD_NC_RES)         /* */
DECLARATION (ASSIST_DATA)         /* */
DECLARATION (REF_BTS_DATA)        /* */

/* Constants */
```

```
/* callreference */
SHORTCALL_REF      0              /* */

/* CursorDataValid */
BYTE   DATA_VALID  0              /* TRUE */

/* CursorDataValid */
BYTE   DATA_VALID1 1              /* TRUE */

/* sb_flag */
BYTE   SB_FLAG             0              /* TRUE */

/* tav */
BYTE   TAV             0xFF       /* NO TAV */

/* bsic */
BYTE   BSIC            0          /* Base Station Code */

/* arfcn */
SHORTARFCN         1              /* Channal number */

/* rssi */
LONG   RSSI            2          /* RSSI */

/* time tag */
LONG   TIME_TAG    3              /* TIME_TAG */

/* fn */
LONG   FN              4          /* TIME_TAG */

/* number length */
BYTE   NUMBER_LENGTH 10                   /* */

/* lac */
SHORTLAC    5                     /*Location Area Code */

/* cell_id */
SHORTCELL_ID       6                      /*Cell identification */

/* req_id */
SHORTREQ_ID        0                      /* */

/* req_id */
SHORTREQ_id1                      /* */

/* req_id */
SHORTREQ_ID_NOT  0                /* */


/* mfrm_offset*/
BYTE   MFRM_OFFSET         8      /* Offset in multiframes between the Scell and the
                                     speceficed cell */

/* otd type*/
BYTE   OTD_TYPE    9       /* 0 = ROUGH_RTD */

/* uncertainty*/
BYTE   UNCERTAINTY         10      /* Max 2 Bit */
```

```
/* exp otd*/
SHORTEXP_OTD        11              /* Expected OTD from network */

/* rough rtd*/
SHORTROUGH_RTD   12              /* Rough RTD from network */

/* reference_relation */
BYTE   REFERENCE_RELATION       0               /* */

/* sb_flag */
BYTE   SB_FLAG                  14              /* TRUE */

/* std_resolution */
BYTE   STD_RESOLUTION           0               /* */


/*          */
BYTE   NUM_MEASUREMENT_SETS             0               /* */


/* num_reference_cells*/
BYTE   NUM_REFERENCE_CELLS      0               /* */
/* loc_method */
BYTE   LOC_METHOD           1       /* */

/* pos_method */
BYTE   POS_METHOD           1               /* */

/* loc_method */
BYTE   LOC_MET              0       /* */

/* pos_method */
BYTE   POS_MET              0               /* */


/* time_slot */
BYTE   TIME_SLOT    0               /* */

/* cause*/
BYTE   RRLC_ERROR_REQ_CAUSE             7               /*7 rrlp_metohod invalid  */

/* cause*/
BYTE   RRLC_ERROR_REQ_CAUSE_1           10              /* */

/* cause*/
BYTE   RRLC_ERROR_REQ_CAUSE_2           20              /* */

/* ta_correction_present */
BYTE   TA_CORRECTION_PRESENT            0               /* */

/* ta_correction */
LONG   TA_CORRECTION            0               /* */

/*          */
BYTE   NUM_MEASUREMENTS                 0               /* */

/* quality */
BYTE   QUALITY              0               /* */
```

```
/* timing_offset */
BYTE   TIMING_OFFSET              0              /* */

/* total_neigh_bts */
BYTE   TOTAL_NEIGH_BTS            0              /* */

/* bts_data */
BYTE   BTS_DATA           0             /* */

/* frame_number */
BYTE   FRAME_NUMBER               0              /* */

/* timing_advance */
LONG   TIMING_ADVANCE             0              /* TIME_TAG */

/* t_mcc */
LONG   T_MCC        0             /* mcc */

/* t_mnc */
LONG   T_MNC        0             /* mnc */


BEGIN_PSTRUCT ("called_party_bcd_num", BCD_NUMBER)
        SET_COMP ("number_length", NUMBER_LENGTH)
        SET_COMP ("bcd", MAX_BCD_LENGTH)
ENDSTRUCT

/* Bcd */
BEGINARRAY_PART (MAX_BCD_LENGTH, 10)
        0x01, 0x02, 0x03, 0x04, 0x05, 0x06, 0x07, 0x08, 0x09, 0x0A
ENDARRAY




BEGIN_PSTRUCT ("eotd_sc_res", EOTD_SC_RES)
        SET_COMP ("sb_flag",SB_FLAG)              /* Data Valid Flag */
        SET_COMP ("bsic",BSIC)                    /* Base Station Identity Code*/
        SET_COMP ("arfcn",ARFCN)          /* Channal Number*/
        SET_COMP ("eotd_crosscor", EXOR_NO)       /* */
        SET_COMP ("d_eotd_nrj",RSSI)              /* RSSI*/
        SET_COMP ("time_tag",TIME_TAG)            /* Time Tag */
ENDSTRUCT

/* eotd_crosscor */
BEGINARRAY_PART (EXOR_NO, 18)
        0x01, 0x02, 0x03, 0x04, 0x05, 0x06,
        0x07, 0x08, 0x09, 0x0A, 0x0B, 0x0C,
        0x0D, 0x0E, 0x0F, 0x10, 0x11, 0x12
ENDARRAY

/* mnc */
BEGINARRAY_PART (MNC, 3)                          /* Mobile network code*/
        0x01, 0x02, 0x03
ENDARRAY
```

```
/* mcc */
BEGINARRAY_PART (MCC, 3)                    /* Mobile country code*/
        0x01, 0x02, 0x03
ENDARRAY


BEGIN_PSTRUCT ("eotd_sc_res1", EOTD_SC_RES1)
        SET_COMP ("sb_flag",SB_FLAG)        /* Data Valid Flag */
        SET_COMP ("bsic",BSIC)              /* Base Station Identity Code*/
        SET_COMP ("arfcn",ARFCN)        /* Channal Number*/
        SET_COMP ("eotd_crosscor", EXOR_NO)     /* */
        SET_COMP ("d_eotd_nrj",RSSI)        /* RSSI*/
        SET_COMP ("time_tag",TIME_TAG)      /* Time Tag */
ENDSTRUCT


/* sms text*/
BEGINARRAY_PART (SMS_TEXT, 0)               /* */
        0x00, 0x00, 0x00, 0x00
ENDARRAY

BEGIN_PSTRUCT ("assist_data", ASSIST_DATA_1)
        SET_COMP ("arfcn",ARFCN)        /* Channal Number*/
        SET_COMP ("bsic",BSIC)              /* Base Station Identity Code*/
        SET_COMP ("mfrm_offset",MFRM_OFFSET)    /* */
        SET_COMP ("otd_type", OTD_TYPE)   /* */
        SET_COMP ("exp_otd",EXP_OTD)        /* */
        SET_COMP ("uncertainty",UNCERTAINTY)    /* */
        SET_COMP ("rough_rtd",ROUGH_RTD)    /* */

ENDSTRUCT




BEGIN_PSTRUCT ("assist_data", ASSIST_DATA_2)
        SET_COMP ("arfcn",ARFCN)        /* Channal Number*/
        SET_COMP ("bsic",BSIC)              /* Base Station Identity Code*/
        SET_COMP ("mfrm_offset",MFRM_OFFSET)    /* */
        SET_COMP ("otd_type", OTD_TYPE)   /* */
        SET_COMP ("exp_otd",EXP_OTD)        /* */
        SET_COMP ("uncertainty",UNCERTAINTY)    /* */
        SET_COMP ("rough_rtd",ROUGH_RTD)    /* */

ENDSTRUCT

BEGIN_PSTRUCT ("assist_data", ASSIST_DATA_3)
        SET_COMP ("arfcn",ARFCN)        /* Channal Number*/
        SET_COMP ("bsic",BSIC)              /* Base Station Identity Code*/
        SET_COMP ("mfrm_offset",MFRM_OFFSET)    /* */
        SET_COMP ("otd_type", OTD_TYPE)   /* */
        SET_COMP ("exp_otd",EXP_OTD)        /* */
        SET_COMP ("uncertainty",UNCERTAINTY)    /* */
        SET_COMP ("rough_rtd",ROUGH_RTD)    /* */
```

```
ENDSTRUCT

BEGIN_PSTRUCT ("assist_data", ASSIST_DATA_4)
        SET_COMP ("arfcn",ARFCN)            /* Channal Number*/
        SET_COMP ("bsic",BSIC)                      /* Base Station Identity Code*/
        SET_COMP ("mfrm_offset",MFRM_OFFSET)  /* */
        SET_COMP ("otd_type", OTD_TYPE)   /* */
        SET_COMP ("exp_otd",EXP_OTD)                /* */
        SET_COMP ("uncertainty",UNCERTAINTY)    /* */
        SET_COMP ("rough_rtd",ROUGH_RTD)        /* */

ENDSTRUCT

BEGIN_PSTRUCT ("assist_data", ASSIST_DATA_5)
        SET_COMP ("arfcn",ARFCN)            /* Channal Number*/
        SET_COMP ("bsic",BSIC)                      /* Base Station Identity Code*/
        SET_COMP ("mfrm_offset",MFRM_OFFSET)  /* */
        SET_COMP ("otd_type", OTD_TYPE)   /* */
        SET_COMP ("exp_otd",EXP_OTD)                /* */
        SET_COMP ("uncertainty",UNCERTAINTY)    /* */
        SET_COMP ("rough_rtd",ROUGH_RTD)        /* */

ENDSTRUCT

BEGIN_PSTRUCT ("assist_data", ASSIST_DATA_6)
        SET_COMP ("arfcn",ARFCN)            /* Channal Number*/
        SET_COMP ("bsic",BSIC)                      /* Base Station Identity Code*/
        SET_COMP ("mfrm_offset",MFRM_OFFSET)  /* */
        SET_COMP ("otd_type", OTD_TYPE)   /* */
        SET_COMP ("exp_otd",EXP_OTD)                /* */
        SET_COMP ("uncertainty",UNCERTAINTY)    /* */
        SET_COMP ("rough_rtd",ROUGH_RTD)        /* */

ENDSTRUCT



BEGIN_PSTRUCT ("assist_data", ASSIST_DATA_7)
        SET_COMP ("arfcn",ARFCN)            /* Channal Number*/
        SET_COMP ("bsic",BSIC)                      /* Base Station Identity Code*/
        SET_COMP ("mfrm_offset",MFRM_OFFSET)  /* */
        SET_COMP ("otd_type", OTD_TYPE)   /* */
        SET_COMP ("exp_otd",EXP_OTD)                /* */
        SET_COMP ("uncertainty",UNCERTAINTY)    /* */
        SET_COMP ("rough_rtd",ROUGH_RTD)        /* */

ENDSTRUCT

BEGIN_PSTRUCT ("assist_data", ASSIST_DATA_8)
        SET_COMP ("arfcn",ARFCN)            /* Channal Number*/
        SET_COMP ("bsic",BSIC)                      /* Base Station Identity Code*/
        SET_COMP ("mfrm_offset",MFRM_OFFSET)  /* */
        SET_COMP ("otd_type", OTD_TYPE)   /* */
        SET_COMP ("exp_otd",EXP_OTD)                /* */
        SET_COMP ("uncertainty",UNCERTAINTY)    /* */
        SET_COMP ("rough_rtd",ROUGH_RTD)        /* */
```

```
ENDSTRUCT

BEGIN_PSTRUCT ("assist_data", ASSIST_DATA_9)
        SET_COMP ("arfcn",ARFCN)            /* Channal Number*/
        SET_COMP ("bsic",BSIC)                      /* Base Station Identity Code*/
        SET_COMP ("mfrm_offset",MFRM_OFFSET)  /* */
        SET_COMP ("otd_type", OTD_TYPE)   /* */
        SET_COMP ("exp_otd",EXP_OTD)                /* */
        SET_COMP ("uncertainty",UNCERTAINTY)    /* */
        SET_COMP ("rough_rtd",ROUGH_RTD)        /* */

ENDSTRUCT

BEGIN_PSTRUCT ("assist_data", ASSIST_DATA_10)
        SET_COMP ("arfcn",ARFCN)            /* Channal Number*/
        SET_COMP ("bsic",BSIC)                      /* Base Station Identity Code*/
        SET_COMP ("mfrm_offset",MFRM_OFFSET)  /* */
        SET_COMP ("otd_type", OTD_TYPE)   /* */
        SET_COMP ("exp_otd",EXP_OTD)                /* */
        SET_COMP ("uncertainty",UNCERTAINTY)    /* */
        SET_COMP ("rough_rtd",ROUGH_RTD)        /* */

ENDSTRUCT

BEGIN_PSTRUCT ("assist_data", ASSIST_DATA_11)
        SET_COMP ("arfcn",ARFCN)            /* Channal Number*/
        SET_COMP ("bsic",BSIC)                      /* Base Station Identity Code*/
        SET_COMP ("mfrm_offset",MFRM_OFFSET)  /* */
        SET_COMP ("otd_type", OTD_TYPE)   /* */
        SET_COMP ("exp_otd",EXP_OTD)                /* */
        SET_COMP ("uncertainty",UNCERTAINTY)    /* */
        SET_COMP ("rough_rtd",ROUGH_RTD)        /* */

ENDSTRUCT



BEGIN_PSTRUCT ("assist_data", ASSIST_DATA_12)
        SET_COMP ("arfcn",ARFCN)            /* Channal Number*/
        SET_COMP ("bsic",BSIC)                      /* Base Station Identity Code*/
        SET_COMP ("mfrm_offset",MFRM_OFFSET)  /* */
        SET_COMP ("otd_type", OTD_TYPE)   /* */
        SET_COMP ("exp_otd",EXP_OTD)                /* */
        SET_COMP ("uncertainty",UNCERTAINTY)    /* */
        SET_COMP ("rough_rtd",ROUGH_RTD)        /* */

ENDSTRUCT

BEGIN_PSTRUCT ("assist_data", ASSIST_DATA_13)
        SET_COMP ("arfcn",ARFCN)            /* Channal Number*/
        SET_COMP ("bsic",BSIC)                      /* Base Station Identity Code*/
        SET_COMP ("mfrm_offset",MFRM_OFFSET)  /* */
        SET_COMP ("otd_type", OTD_TYPE)   /* */
        SET_COMP ("exp_otd",EXP_OTD)                /* */
        SET_COMP ("uncertainty",UNCERTAINTY)    /* */
        SET_COMP ("rough_rtd",ROUGH_RTD)        /* */
```

```
ENDSTRUCT

BEGIN_PSTRUCT ("assist_data", ASSIST_DATA_14)
        SET_COMP ("arfcn",ARFCN)            /* Channal Number*/
        SET_COMP ("bsic",BSIC)                      /* Base Station Identity Code*/
        SET_COMP ("mfrm_offset",MFRM_OFFSET)  /* */
        SET_COMP ("otd_type", OTD_TYPE)   /* */
        SET_COMP ("exp_otd",EXP_OTD)              /* */
        SET_COMP ("uncertainty",UNCERTAINTY)      /* */
        SET_COMP ("rough_rtd",ROUGH_RTD)          /* */

ENDSTRUCT


BEGIN_PSTRUCT ("assist_data", ASSIST_DATA_15)
        SET_COMP ("arfcn",ARFCN)            /* Channal Number*/
        SET_COMP ("bsic",BSIC)                      /* Base Station Identity Code*/
        SET_COMP ("mfrm_offset",MFRM_OFFSET)  /* */
        SET_COMP ("otd_type", OTD_TYPE)   /* */
        SET_COMP ("exp_otd",EXP_OTD)              /* */
        SET_COMP ("uncertainty",UNCERTAINTY)      /* */
        SET_COMP ("rough_rtd",ROUGH_RTD)          /* */

ENDSTRUCT




BEGIN_STRUCT_ARRAY (ASSIST_DATA, 15)                    /* ASSIST_DATA */
                ASSIST_DATA_1,
                ASSIST_DATA_2,
                ASSIST_DATA_3,
                ASSIST_DATA_4,
                ASSIST_DATA_5,
                ASSIST_DATA_6,
                ASSIST_DATA_7,
                ASSIST_DATA_8,
                ASSIST_DATA_9,
                ASSIST_DATA_10,
                ASSIST_DATA_11,
                ASSIST_DATA_12,
                ASSIST_DATA_13,
                ASSIST_DATA_14,
                ASSIST_DATA_15
ENDARRAY
```

```
BEGIN_PSTRUCT ("eotd_nc_res", EOTD_NC_RES_1)
        SET_COMP ("sb_flag",SB_FLAG)              /* Data Valid Flag */
        SET_COMP ("bsic",BSIC)                    /* Base Station Identity Code*/
        SET_COMP ("arfcn",ARFCN)          /* Channal Number*/
        SET_COMP ("eotd_crosscor", EXOR_NO)       /* */
        SET_COMP ("d_eotd_nrj",RSSI)              /* RSSI*/
        SET_COMP ("time_tag",TIME_TAG)            /* Time Tag */
```

ENDSTRUCT

```
BEGIN_PSTRUCT ("eotd_nc_res", EOTD_NC_RES_2)          /* */
        SET_COMP ("sb_flag",SB_FLAG)              /* Data Valid Flag */
        SET_COMP ("bsic",BSIC)                    /* Base Station Identity Code*/
        SET_COMP ("arfcn",ARFCN)          /* Channal Number*/
        SET_COMP ("eotd_crosscor", EXOR_NO)       /* */
        SET_COMP ("d_eotd_nrj",RSSI)              /* RSSI*/
        SET_COMP ("time_tag",TIME_TAG)            /* Time Tag */

ENDSTRUCT

BEGIN_PSTRUCT ("eotd_nc_res", EOTD_NC_RES_3)
        SET_COMP ("sb_flag",SB_FLAG)              /* Data Valid Flag */
        SET_COMP ("bsic",BSIC)                    /* Base Station Identity Code*/
        SET_COMP ("arfcn",ARFCN)          /* Channal Number*/
        SET_COMP ("eotd_crosscor", EXOR_NO)       /* */
        SET_COMP ("d_eotd_nrj",RSSI)              /* RSSI*/
        SET_COMP ("time_tag",TIME_TAG)            /* Time Tag */

ENDSTRUCT
```

```
BEGIN_PSTRUCT ("eotd_nc_res", EOTD_NC_RES_4)
        SET_COMP ("sb_flag",SB_FLAG)              /* Data Valid Flag */
        SET_COMP ("bsic",BSIC)                    /* Base Station Identity Code*/
        SET_COMP ("arfcn",ARFCN)          /* Channal Number*/
        SET_COMP ("eotd_crosscor", EXOR_NO)       /* */
        SET_COMP ("d_eotd_nrj",RSSI)              /* RSSI*/
        SET_COMP ("time_tag",TIME_TAG)            /* Time Tag */

ENDSTRUCT

BEGIN_PSTRUCT ("eotd_nc_res", EOTD_NC_RES_5)
        SET_COMP ("sb_flag",SB_FLAG)              /* Data Valid Flag */
        SET_COMP ("bsic",BSIC)                    /* Base Station Identity Code*/
        SET_COMP ("arfcn",ARFCN)          /* Channal Number*/
        SET_COMP ("eotd_crosscor", EXOR_NO)       /* */
        SET_COMP ("d_eotd_nrj",RSSI)              /* RSSI*/
        SET_COMP ("time_tag",TIME_TAG)            /* Time Tag */

ENDSTRUCT
```

```
BEGIN_PSTRUCT ("eotd_nc_res", EOTD_NC_RES_6)
        SET_COMP ("sb_flag",SB_FLAG)            /* Data Valid Flag */
        SET_COMP ("bsic",BSIC)                  /* Base Station Identity Code*/
        SET_COMP ("arfcn",ARFCN)        /* Channal Number*/
        SET_COMP ("eotd_crosscor", EXOR_NO)     /* */
        SET_COMP ("d_eotd_nrj",RSSI)            /* RSSI*/
        SET_COMP ("time_tag",TIME_TAG)          /* Time Tag */

ENDSTRUCT

BEGIN_PSTRUCT ("eotd_nc_res", EOTD_NC_RES_7)
        SET_COMP ("sb_flag",SB_FLAG)            /* Data Valid Flag */
        SET_COMP ("bsic",BSIC)                  /* Base Station Identity Code*/
        SET_COMP ("arfcn",ARFCN)        /* Channal Number*/
        SET_COMP ("eotd_crosscor", EXOR_NO)     /* */
        SET_COMP ("d_eotd_nrj",RSSI)            /* RSSI*/
        SET_COMP ("time_tag",TIME_TAG)          /* Time Tag */

ENDSTRUCT

BEGIN_PSTRUCT ("eotd_nc_res", EOTD_NC_RES_8)
        SET_COMP ("sb_flag",SB_FLAG)            /* Data Valid Flag */
        SET_COMP ("bsic",BSIC)                  /* Base Station Identity Code*/
        SET_COMP ("arfcn",ARFCN)        /* Channal Number*/
        SET_COMP ("eotd_crosscor", EXOR_NO)     /* */
        SET_COMP ("d_eotd_nrj",RSSI)            /* RSSI*/
        SET_COMP ("time_tag",TIME_TAG)          /* Time Tag */

ENDSTRUCT

BEGIN_PSTRUCT ("eotd_nc_res", EOTD_NC_RES_9)
        SET_COMP ("sb_flag",SB_FLAG)            /* Data Valid Flag */
        SET_COMP ("bsic",BSIC)                  /* Base Station Identity Code*/
        SET_COMP ("arfcn",ARFCN)        /* Channal Number*/
        SET_COMP ("eotd_crosscor", EXOR_NO)     /* */
        SET_COMP ("d_eotd_nrj",RSSI)            /* RSSI*/
        SET_COMP ("time_tag",TIME_TAG)          /* Time Tag */

ENDSTRUCT

BEGIN_PSTRUCT ("eotd_nc_res", EOTD_NC_RES_10)
        SET_COMP ("sb_flag",SB_FLAG)            /* Data Valid Flag */
        SET_COMP ("bsic",BSIC)                  /* Base Station Identity Code*/
        SET_COMP ("arfcn",ARFCN)        /* Channal Number*/
        SET_COMP ("eotd_crosscor", EXOR_NO)     /* */
        SET_COMP ("d_eotd_nrj",RSSI)            /* RSSI*/
        SET_COMP ("time_tag",TIME_TAG)          /* Time Tag */

ENDSTRUCT

BEGIN_PSTRUCT ("eotd_nc_res", EOTD_NC_RES_11)
        SET_COMP ("sb_flag",SB_FLAG)            /* Data Valid Flag */
        SET_COMP ("bsic",BSIC)                  /* Base Station Identity Code*/
        SET_COMP ("arfcn",ARFCN)        /* Channal Number*/
        SET_COMP ("eotd_crosscor", EXOR_NO)     /* */
        SET_COMP ("d_eotd_nrj",RSSI)            /* RSSI*/
        SET_COMP ("time_tag",TIME_TAG)          /* Time Tag */

ENDSTRUCT
```

```
BEGIN_PSTRUCT ("eotd_nc_res", EOTD_NC_RES_12)
        SET_COMP ("sb_flag",SB_FLAG)                /* Data Valid Flag */
        SET_COMP ("bsic",BSIC)                      /* Base Station Identity Code*/
        SET_COMP ("arfcn",ARFCN)            /* Channal Number*/
        SET_COMP ("eotd_crosscor", EXOR_NO)         /* */
        SET_COMP ("d_eotd_nrj",RSSI)                /* RSSI*/
        SET_COMP ("time_tag",TIME_TAG)              /* Time Tag */

ENDSTRUCT

BEGIN_STRUCT_ARRAY (EOTD_NC_RES, 12)                /* NC Measurements*/
                EOTD_NC_RES_1,
                EOTD_NC_RES_2,
                EOTD_NC_RES_3,
                EOTD_NC_RES_4,
                EOTD_NC_RES_5,
                EOTD_NC_RES_6,
                EOTD_NC_RES_7,
                EOTD_NC_RES_8,
                EOTD_NC_RES_9,
                EOTD_NC_RES_10,
                EOTD_NC_RES_11,
                EOTD_NC_RES_12
ENDARRAY
```

```
BEGIN_PSTRUCT ("timing_data", TIMING_DATA)
        SET_COMP ("mcc",T_MCC)                                          /* */
        SET_COMP ("mnc",T_MNC)                                          /* */
        SET_COMP ("reference_relation",REFERENCE_RELATION)              /* */
        SET_COMP ("time_slot",TIME_SLOT)                        /* */
        SET_COMP ("std_resolution",STD_RESOLUTION)                      /* */
        SET_COMP ("num_measurement_sets",NUM_MEASUREMENT_SETS)          /* */
        SET_COMP ("num_reference_cells",NUM_REFERENCE_CELLS)            /* */
        SET_COMP ("ta_correction_present",TA_CORRECTION_PRESENT)        /* */
        SET_COMP ("ta_correction",TA_CORRECTION)                        /* */
        SET_COMP ("ref_bts_data",REF_BTS_DATA)                          /* */


ENDSTRUCT

BEGIN_PSTRUCT ("ref_bts_data",REF_BTS_DATA)
        SET_COMP ("cell_id",CELL_ID)                                    /* */
        SET_COMP ("lac",LAC)                                            /* */
        SET_COMP ("quality",QUALITY)                                    /* */
        SET_COMP ("num_measurements",NUM_MEASUREMENTS)                  /* */
```

```
        SET_COMP ("timing_offset",TIMING_OFFSET)                /* */
        SET_COMP ("total_neigh_bts",TOTAL_NEIGH_BTS)                /* */
        SET_COMP ("bts_data",BTS_DATA)                              /* */
        SET_COMP ("frame_number",FRAME_NUMBER)                      /* */
        SET_COMP ("timing_advance",TIMING_ADVANCE)                  /* */

ENDSTRUCT
```

4 TEST CASES

4.1 Internal Routing

4.1.1 LC000: Configure internal routing and PCO view

Description: Internal routing is configured and the duplication of primitives for performing the component tests with TAP and PCO view is carried out

Preamble: None

```
      MMI                                LC                                RR
      |                                  |                                 |
COMMAND (LC RESET)
COMMAND (MMI RESET)
COMMAND (RR RESET)
      |                                  |                                 |
COMMAND (TAP REDIRECT CLEAR)
COMMAND (LC REDIRECT CLEAR)
COMMAND (TAP REDIRECT TAP LC)
COMMAND (LC REDIRECT MMI TAP)
COMMAND (LC REDIRECT RR TAP)
      |                              |                          |
```

Parametrization

Primitive	Parameter	Value
History: 23.09.02	MNC	Initial

4.1.2 LC001: Configure internal routing and PCO view

Description: Internal routing is configured and the duplication of primitives for performing the component tests with TAP and PCO view is carried out

Preamble: None

```
      RRLP                              LC                              RR
       |                                |                               |
COMMAND (LC RESET)
COMMAND (RRLP RESET)
COMMAND (RR RESET)
       |                                |                               |
COMMAND (TAP REDIRECT CLEAR)
COMMAND (LC REDIRECT CLEAR)
COMMAND (TAP REDIRECT TAP LC)
COMMAND (LC REDIRECT RRLP TAP)
COMMAND (LC REDIRECT RR TAP)
       |                          |                     |
```

Parametrization

Primitive	Parameter	Value

History:	16.10.02	MNC	Initial

4.2 Position Request

4.2.1 LC002: EOTD-Controller1: Position calculation (only for test)

Description: LC make 2 position calculations.
Preamble: LC000

```
       MMI                          LC                          RR
        |                           |                           |
(1)     |                           |     RRLC_MEAS_IND         |
        |                           *<==========================*
(2)     |     MNLC_SMS_MEAS_REQ     |                           |
        *==========================>*                           |
(3)     |                           |     RRLC_MEAS_REQ         |
        |                          *============================>*
(4)     |                           |     RRLC_MEAS_IND         |
        |                           *<==========================*
(5)     |     MNLC_SMS_MEAS_CNF     |                           |
        *<==========================*                           |
(6)     |     MNLC_SMS_MEAS_REQ     |                           |
        *==========================>*                           |
(7)     |                           |     RRLC_MEAS_REQ         |
        |                          *============================>*
(8)     |                           |     RRLC_MEAS_IND         |
        |                           *<==========================*
(9)     |     MNLC_SMS_MEAS_CNF     |                           |
        *<==========================*                           |
(10)    |                           |     RRLC_MEAS_IND         |
        |                           *<==========================*
        |                           |                           |
```

Parametrization

Primitive	Parameter	Value
(1) RRLC_MEAS_IND		
	mcc	MCC
	mnc	MNC
	lac	LAC
	cell_id	CELL_ID
	eotd_mode	NOT_USED
	req_id	REQ_ID_NOT
	tav	TAV
	fn	FN
	eotd_sc_res	EOTD_SC_RES
	eotd_sc_res1	EOTD_SC_RES1
	eotd_nc_res	EOTD_NC_RES
(2) MNLC_SMS_MEAS_REQ		
	reference	CALL_REF
	called_party_bcd_num	BCD_NUMBER
(3) RRLC_MEAS_REQ		
	req_id	REQ_ID
	arfcn	NOT_USED
	bsic	NOT_USED
	assist_data	NOT_USED
(4) RRLC_MEAS_IND		
	mcc	MCC
	mnc	MNC
	lac	LAC
	cell_id	CELL_ID
	eotd_mode	NOT_USED
	req_id	REQ_ID
	tav	TAV
	fn	FN
	eotd_sc_res	EOTD_SC_RES
	eotd_sc_res1	EOTD_SC_RES1
	eotd_nc_res	EOTD_NC_RES
(5) MNLC_SMS_MEAS_CNF		
	reference	CALL_REF
	data_valid	DATA_VALID
	sms_text	SMS_TEXT
(6) MNLC_SMS_MEAS_REQ		
	reference	CALL_REF
	called_party_bcd_num	BCD_NUMBER

(7) RRLC_MEAS_REQ

req_id	REQ_id
arfcn	NOT_USED
bsic	NOT_USED
assist_data	NOT_USED

(8) RRLC_MEAS_IND

mcc	MCC
mnc	MNC
lac	LAC
cell_id	CELL_ID
eotd_mode	NOT_USED
req_id	REQ_id
tav	TAV
fn	FN
eotd_sc_res	EOTD_SC_RES
eotd_sc_res1	EOTD_SC_RES1
eotd_nc_res	EOTD_NC_RES

(9) MNLC_SMS_MEAS_CNF

reference	CALL_REF
data_valid	DATA_VALID
sms_text	SMS_TEXT

(10) RRLC_MEAS_IND

mcc	MCC
mnc	MNC
lac	LAC
cell_id	CELL_ID
eotd_mode	NOT_USED
req_id	REQ_ID_NOT
tav	TAV
fn	FN
eotd_sc_res	EOTD_SC_RES
eotd_sc_res1	EOTD_SC_RES1
eotd_nc_res	EOTD_NC_RES

History:	23.10.02	MNC	Initial

4.2.2 LC003: EOTD-Controller1: (only for test)

Description: Test if it is possible for LC to send and receive a signal.
Preamble: LC000

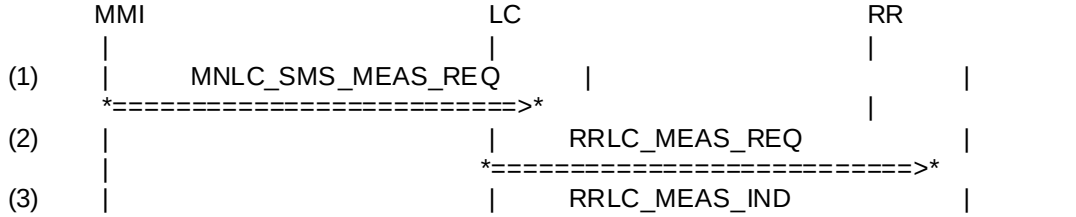

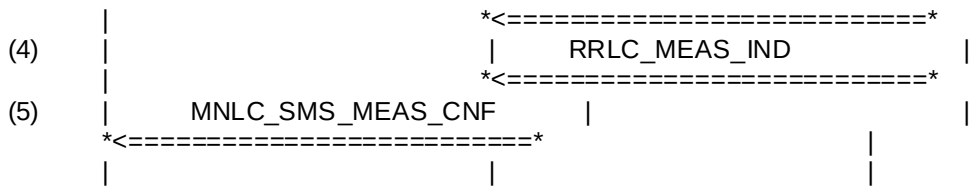

Parametrization

Primitive	Parameter	Value
(1) MNLC_SMS_MEAS_REQ		
	reference	NOT_USED
	called_party_bcd_num	NOT_USED
(2) RRLC_MEAS_REQ		
	req_id	REQ_ID
	arfcn	NOT_USED
	bsic	NOT_USED
	assist_data	NOT_USED
(3) RRLC_MEAS_IND		
	mcc	MCC
	mnc	MNC
	lac	LAC
	cell_id	CELL_ID
	eotd_mode	NOT_USED
	req_id	REQ_ID_NOT
	tav	TAV
	fn	FN
	eotd_sc_res	EOTD_SC_RES
	eotd_sc_res1	EOTD_SC_RES1
	eotd_nc_res	EOTD_NC_RES
(4) RRLC_MEAS_IND		
	mcc	MCC
	mnc	MNC
	lac	LAC
	cell_id	CELL_ID
	eotd_mode	NOT_USED
	req_id	REQ_ID
	tav	TAV
	fn	FN
	eotd_sc_res	EOTD_SC_RES
	eotd_sc_res1	EOTD_SC_RES1
	eotd_nc_res	EOTD_NC_RES
(5) MNLC_SMS_MEAS_CNF		
	reference	NOT_USED
	data_valid	NOT_USED
	sms_text	NOT_USED

History:	23.09.02	MNC	Initial

4.2.3 LC004: EOTD-Controller1: Position calculation

Description: LC receive a MNLC_SMS_SMS_REQ and ask RR for new position data (RRLC_MEAS_REQ) LC receive new position data (RRLC_MEAS_IND) and send them to the algorithm. When the LC receive the calculated data from the algorithm it send the data to MMI in the MNLC_SMS_MEAS_CNF.

Preamble: LC000

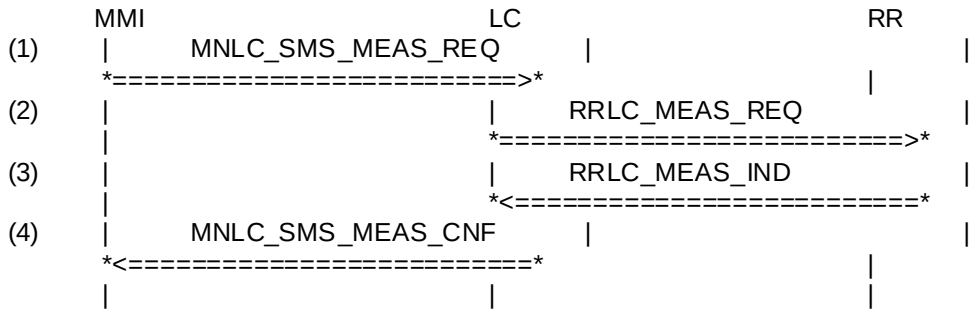

Parametrization

Primitive	Parameter	Value
(1) MNLC_SMS_MEAS_REQ		
	reference	CALL_REF
	called_party_bcd_num	BCD_NUMBER
(2) RRLC_MEAS_REQ		
	req_id	REQ_ID
	arfcn	NOT_USED
	bsic	NOT_USED
	assist_data	NOT_USED
(3) RRLC_MEAS_IND		
	mcc	MCC
	mnc	MNC
	lac	LAC
	cell_id	CELL_ID
	eotd_mode	NOT_USED
	req_id	REQ_ID
	tav	TAV
	fn	FN
	eotd_sc_res	EOTD_SC_RES
	eotd_sc_res1	EOTD_SC_RES1
	eotd_nc_res	EOTD_NC_RES

(4) MNLC_SMS_MEAS_CNF			
		reference	CALL_REF
		data_valid	DATA_VALID
		sms_text	SMS_TEXT

History:	23.09.02	MNC	Initial

4.2.4 LC005: EOTD-Controller1: RRLP request no measurement data

Description: LC receive a RRLP_POS_IND and ask RR for new position data (RRLC_MEAS_REQ) LC receive new position data (RRLC_MEAS_IND) and send them to the algorithm. When the LC receive the calculated data from the algorithm it send the data to RRLP in the RRLP_POS_RES.

Preamble: LC001

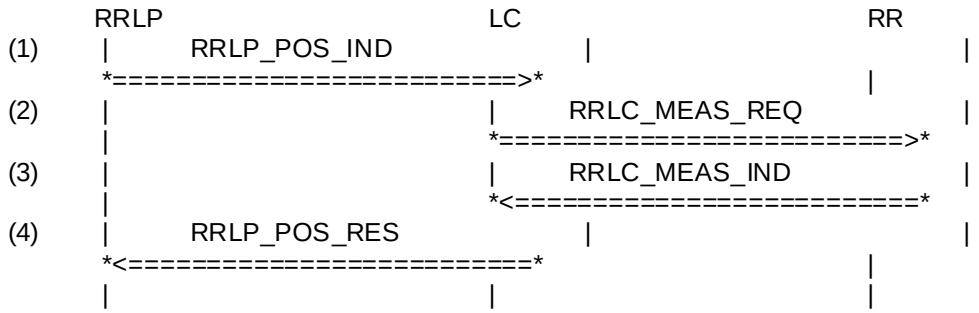

Parametrization

Primitive	Parameter	Value
(1) RRLP_POS_IND		
assist_data	ASSIST_DATA	
loc_method	LOC_MET	
pos_method	POS_MET	
arfcn	ARFCN	
bsic	BSIC	
(2) RRLC_MEAS_REQ		
req_id	REQ_ID	
arfcn	NOT_USED	
bsic	NOT_USED	
assist_data	NOT_USED	
(3) RRLC_MEAS_IND		
mcc	MCC	
mnc	MNC	
lac	LAC	
cell_id	CELL_ID	
eotd_mode	NOT_USED	
req_id	REQ_ID	

tav	TAV
fn	FN
eotd_sc_res	EOTD_SC_RES
eotd_sc_res1	EOTD_SC_RES1
eotd_nc_res	EOTD_NC_RES

(4) RRLP_POS_RES

timing_data	NOT_USED

History:23.09.02 MNC Initial

4.2.5 LC006: EOTD-Controller1: Position calculation

Description: LC has enough information by the three RRLC_MEAS_IND to make a position calculation then RRLP ask for a position.

Preamble: LC001

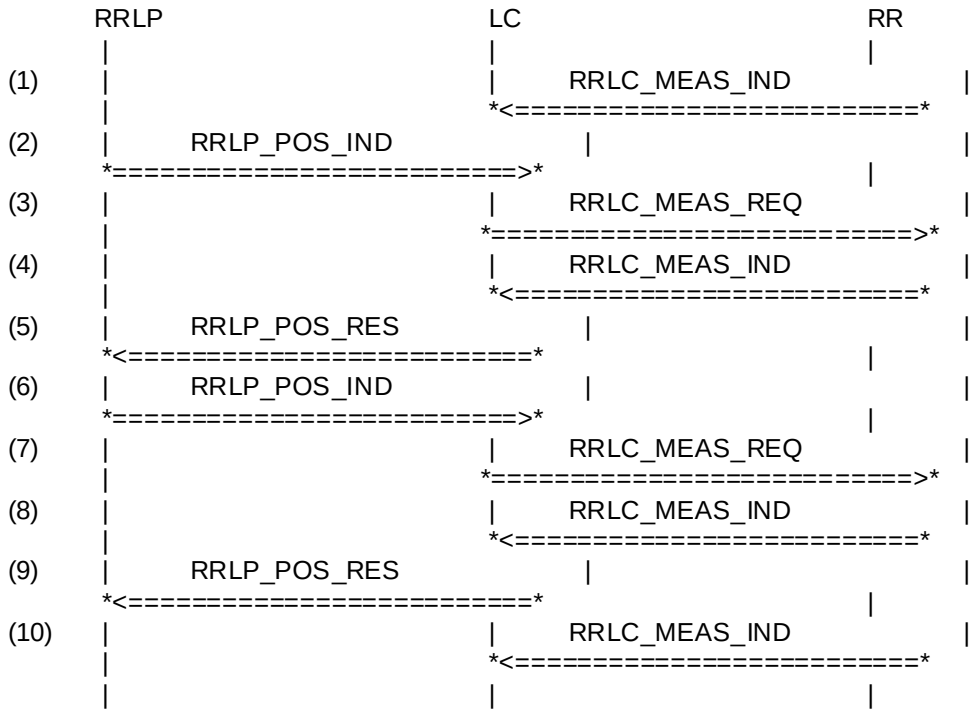

Parametrization

Primitive	Parameter	Value
(1) RRLC_MEAS_IND		
	mcc	MCC
	mnc	MNC
	lac	LAC
	cell_id	CELL_ID
	eotd_mode	NOT_USED
	req_id	REQ_ID_NOT

	tav	TAV
	fn	FN
	eotd_sc_res	EOTD_SC_RES
	eotd_sc_res1	EOTD_SC_RES1
	eotd_nc_res	EOTD_NC_RES
(2)	RRLP_POS_IND	
	assist_data	ASSIST_DATA
	loc_method	LOC_MET
	pos_method	POS_MET
	arfcn	ARFCN
	bsic	BSIC
(3) RRLC_MEAS_REQ		
	req_id	REQ_ID
	arfcn	NOT_USED
	bsic	NOT_USED
	assist_data	NOT_USED
(4) RRLC_MEAS_IND		
	mcc	MCC
	mnc	MNC
	lac	LAC
	cell_id	CELL_ID
	eotd_mode	NOT_USED
	req_id	REQ_ID
	tav	TAV
	fn	FN
	eotd_sc_res	EOTD_SC_RES
	eotd_sc_res1	EOTD_SC_RES1
	eotd_nc_res	EOTD_NC_RES
(5) RRLP_POS_RES		
	timing_data	NOT_USED
(6)	RRLP_POS_IND	
	assist_data	ASSIST_DATA
	loc_method	LOC_MET
	pos_method	POS_MET
	arfcn	ARFCN
	bsic	BSIC
(7) RRLC_MEAS_REQ		
	req_id	REQ_id
	arfcn	NOT_USED
	bsic	NOT_USED
	assist_data	NOT_USED

(8) RRLC_MEAS_IND

mcc	MCC
mnc	MNC
lac	LAC
cell_id	CELL_ID
eotd_mode	NOT_USED
req_id	REQ_id
tav	TAV
fn	FN
eotd_sc_res	EOTD_SC_RES
eotd_sc_res1	EOTD_SC_RES1
eotd_nc_res	EOTD_NC_RES

(9) RRLP_POS_RES

timing_data	NOT_USED

(10) RRLC_MEAS_IND

mcc	MCC
mnc	MNC
lac	LAC
cell_id	CELL_ID
eotd_mode	NOT_USED
req_id	REQ_ID_NOT
tav	TAV
fn	FN
eotd_sc_res	EOTD_SC_RES
eotd_sc_res1	EOTD_SC_RES1
eotd_nc_res	EOTD_NC_RES

History:23.09.02 MNC Initial

4.2.6 LC007: EOTD-Controller1: RRLP request location method not supported

Description: The location method requested to be used by SMLC is not supported.
Preamble: LC001

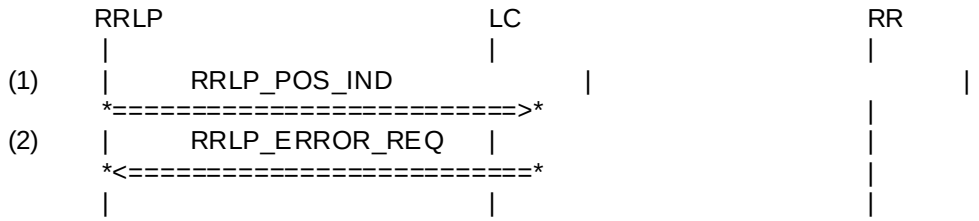

Parametrization

Primitive	Parameter	Value
(1) RRLP_POS_IND		
assist_data	ASSIST_DATA	
loc_method	LOC_METHOD	
pos_method	POS_METHOD	
arfcn	ARFCN	
bsic	BSIC	

(2) RRLP_ERROR_REQ

cause RRLC_ERROR_REQ_CAUSE

History:23.09.02 MNC Initial

4.2.7 LC008: EOTD-Controller1: RRLP request serving BTS not reference BTS

Description: The reference BTS received in the assistance data differs from the serving BTS.
Preamble: LC001

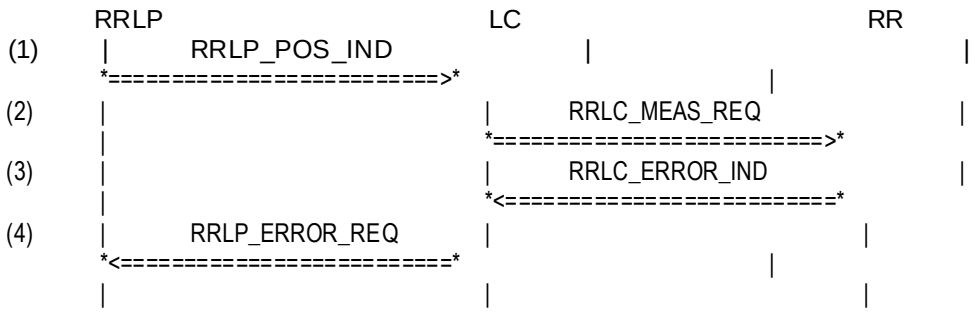

Parametrization

Primitive	Parameter	Value
(1) RRLP_POS_IND		
assist_data	ASSIST_DATA	
loc_method	LOC_MET	
pos_method	POS_MET	
arfcn	ARFCN	
bsic	BSIC	
(2) RRLC_MEAS_REQ		
req_id	REQ_ID	
arfcn	NOT_USED	
bsic	NOT_USED	
assist_data	NOT_USED	
(3) RRLC_ERROR_IND		
cause	RRLC_ERROR_REQ_CAUSE_1	
(4) RRLP_ERROR_REQ		
cause	RRLC_ERROR_REQ_CAUSE_1	

History:23.09.02 MNC Initial

4.2.8 LC009: EOTD-Controller1: RRLP request handover during measurements.

Description: A handover occurs before the measurements are completed.
Preamble: LC001

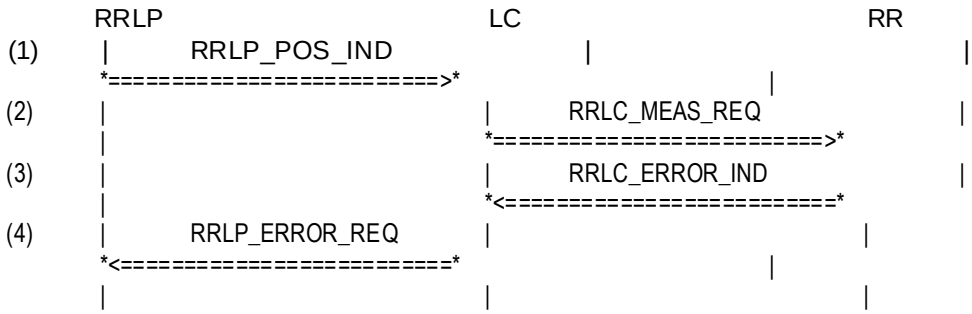

Parametrization

Primitive	Parameter	Value
(1) RRLP_POS_IND		
	assist_data	ASSIST_DATA
	loc_method	LOC_MET
	pos_method	POS_MET
	arfcn	ARFCN
	bsic	BSIC
(2) RRLC_MEAS_REQ		
	req_id	REQ_ID
	arfcn	NOT_USED
	bsic	NOT_USED
	assist_data	NOT_USED
(3) RRLC_ERROR_IND		
	cause	RRLC_ERROR_REQ_CAUSE_2
(4) RRLP_ERROR_REQ		
	cause	RRLC_ERROR_REQ_CAUSE_2

History:23.09.02 MNC Initial

4.2.9 LC010: EOTD-Controller1: Position calculation

Description: LC receive a MNLC_SMS_SMS_REQ and ask RR for new position data (RRLC_MEAS_REQ) LC receive new position data (RRLC_MEAS_IND) and send them to the algorithm. When the LC receive the calculated data from the algorithm it send the data to MMI in the MNLC_SMS_MEAS_CNF.
Preamble: LC000

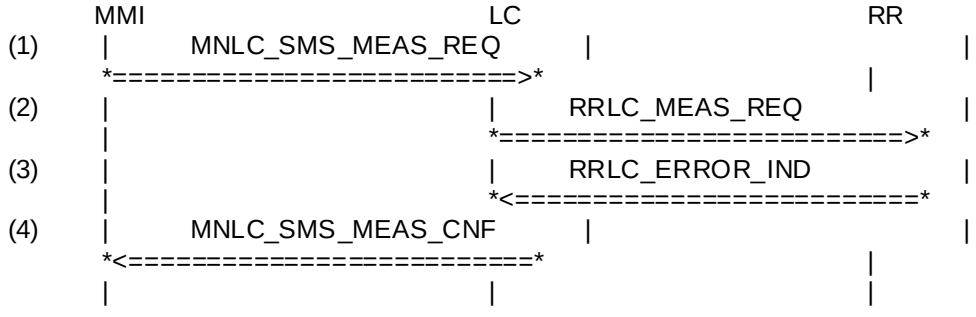

Parametrization

Primitive	Parameter	Value
(1) MNLC_SMS_MEAS_REQ		
	reference	CALL_REF
	called_party_bcd_num	BCD_NUMBER
(2) RRLC_MEAS_REQ		
	req_id	REQ_ID
	arfcn	NOT_USED
	bsic	NOT_USED
	assist_data	NOT_USED
(3) RRLC_ERROR_IND		
	cause	RRLC_ERROR_REQ_CAUSE_2
(4) MNLC_SMS_MEAS_CNF		
	reference	NOT_USED
	data_valid	DATA_VALID1
	sms_text	NOT_USED

History: 23.09.02 MNC Initial

4.2.10 LC011: EOTD-Controller1: RRLP request no measurement data

Description: LC receive a RRLP_POS_IND and ask RR for new position data (RRLC_MEAS_REQ) LC receive new position data (RRLC_MEAS_IND) and send them to the algorithm. When the LC receive the calculated data from the algorithm it send the data to RRLP in the RRLP_POS_RES.

Preamble: LC001

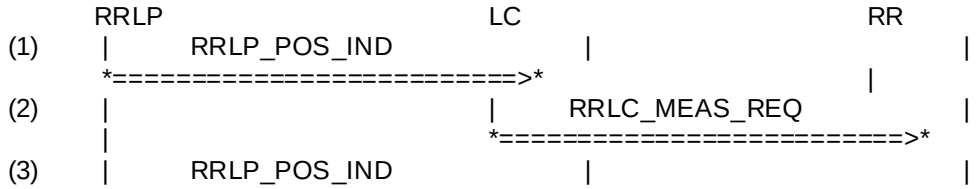

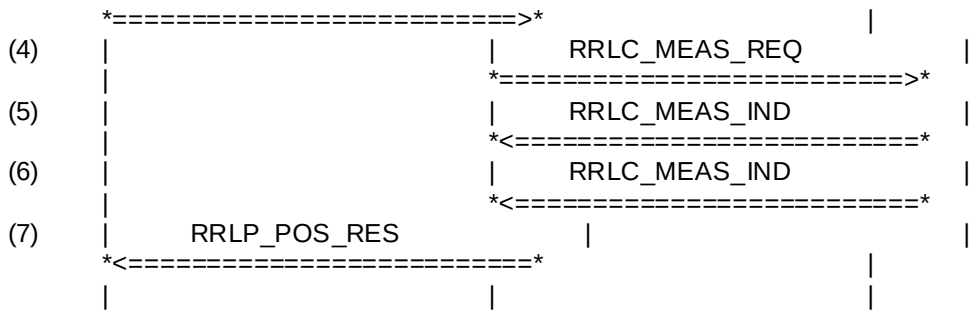

Parametrization

Primitive	Parameter	Value
(1) RRLP_POS_IND		
	assist_data	ASSIST_DATA
	loc_method	LOC_MET
	pos_method	POS_MET
	arfcn	ARFCN
	bsic	BSIC
(2) RRLC_MEAS_REQ		
	req_id	REQ_ID
	arfcn	NOT_USED
	bsic	NOT_USED
	assist_data	NOT_USED
(3) RRLP_POS_IND		
	assist_data	ASSIST_DATA
	loc_method	LOC_MET
	pos_method	POS_MET
	arfcn	ARFCN
	bsic	BSIC
(4) RRLC_MEAS_REQ		
	req_id	REQ_id
	arfcn	NOT_USED
	bsic	NOT_USED
	assist_data	NOT_USED
(5)	RRLC_MEAS_IND	
	mcc	MCC
	mnc	MNC
	lac	LAC
	cell_id	CELL_ID
	eotd_mode	NOT_USED
	req_id	REQ_ID
	tav	TAV
	fn	FN
	eotd_sc_res	EOTD_SC_RES
	eotd_sc_res1	EOTD_SC_RES1
	eotd_nc_res	EOTD_NC_RES

(6)	RRLC_MEAS_IND	
	mcc	MCC
	mnc	MNC
	lac	LAC
	cell_id	CELL_ID
	eotd_mode	NOT_USED
	req_id	REQ_id
	tav	TAV
	fn	FN
	eotd_sc_res	EOTD_SC_RES
	eotd_sc_res1	EOTD_SC_RES1
	eotd_nc_res	EOTD_NC_RES
(7) RRLP_POS_RES		
	timing_data	NOT_USED

History:23.09.02 MNC Initial

Appendices

A. Acronyms

DS-WCDMA	Direct Sequence/Spread Wideband Code Division Multiple Access

B. Glossary

International Mobile Telecommunication 2000 (IMT-2000/ITU-2000)	Formerly referred to as FPLMTS (Future Public Land-Mobile Telephone System), this is the ITU's specification/family of standards for 3G. This initiative provides a global infrastructure through both satellite and terrestrial systems, for fixed and mobile phone users. The family of standards is a framework comprising a mix/blend of systems providing global roaming. <URL: http://www.imt-2000.org/>