Circuit descriptions

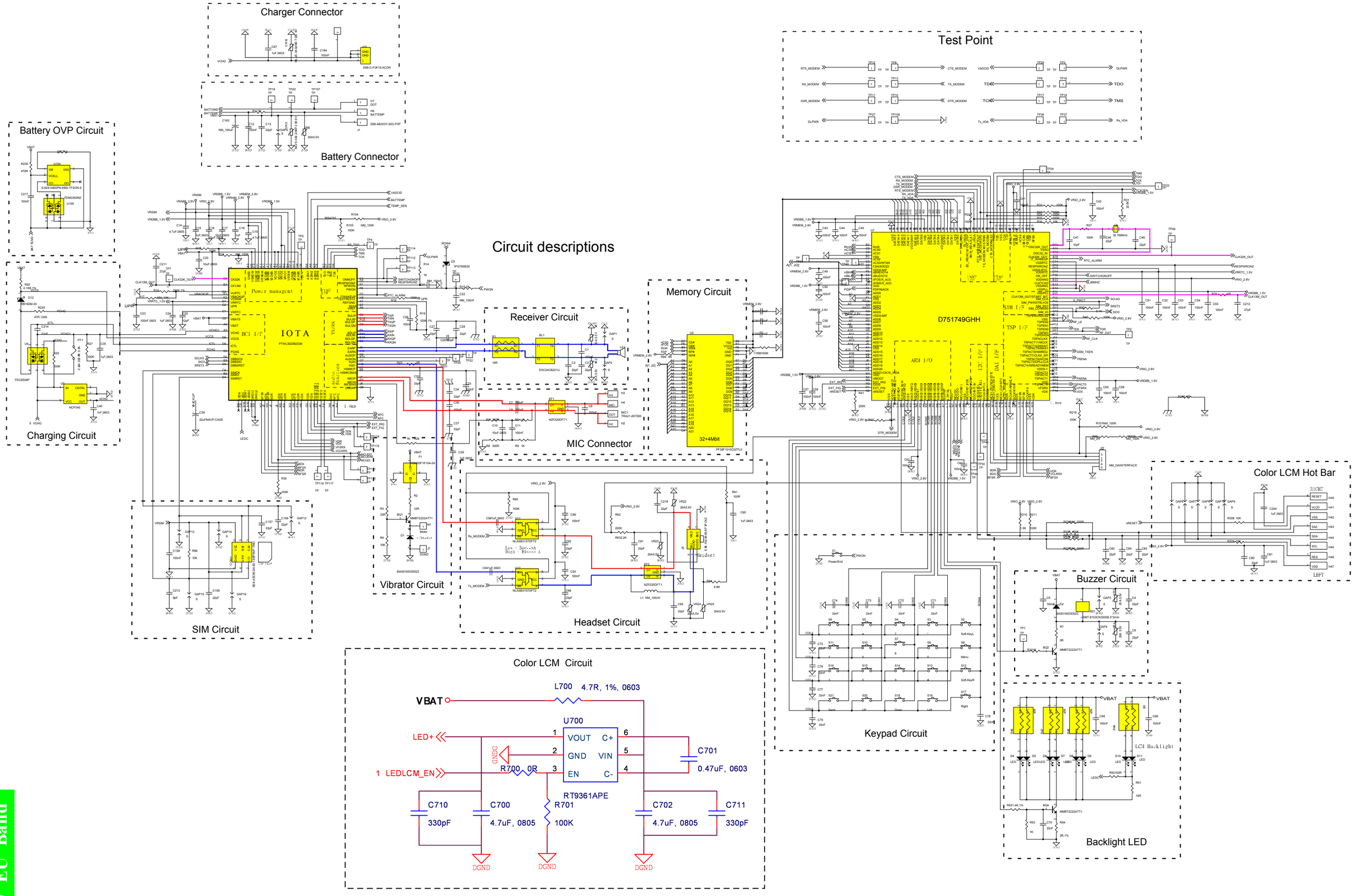

C139 EU Band

Service Engineering & Optimization
Level 3 Authorized

	2005.8.16
Level 3 Schematics	Rev 1.0
C139 EU band	
Mandy Chen	Page1of2

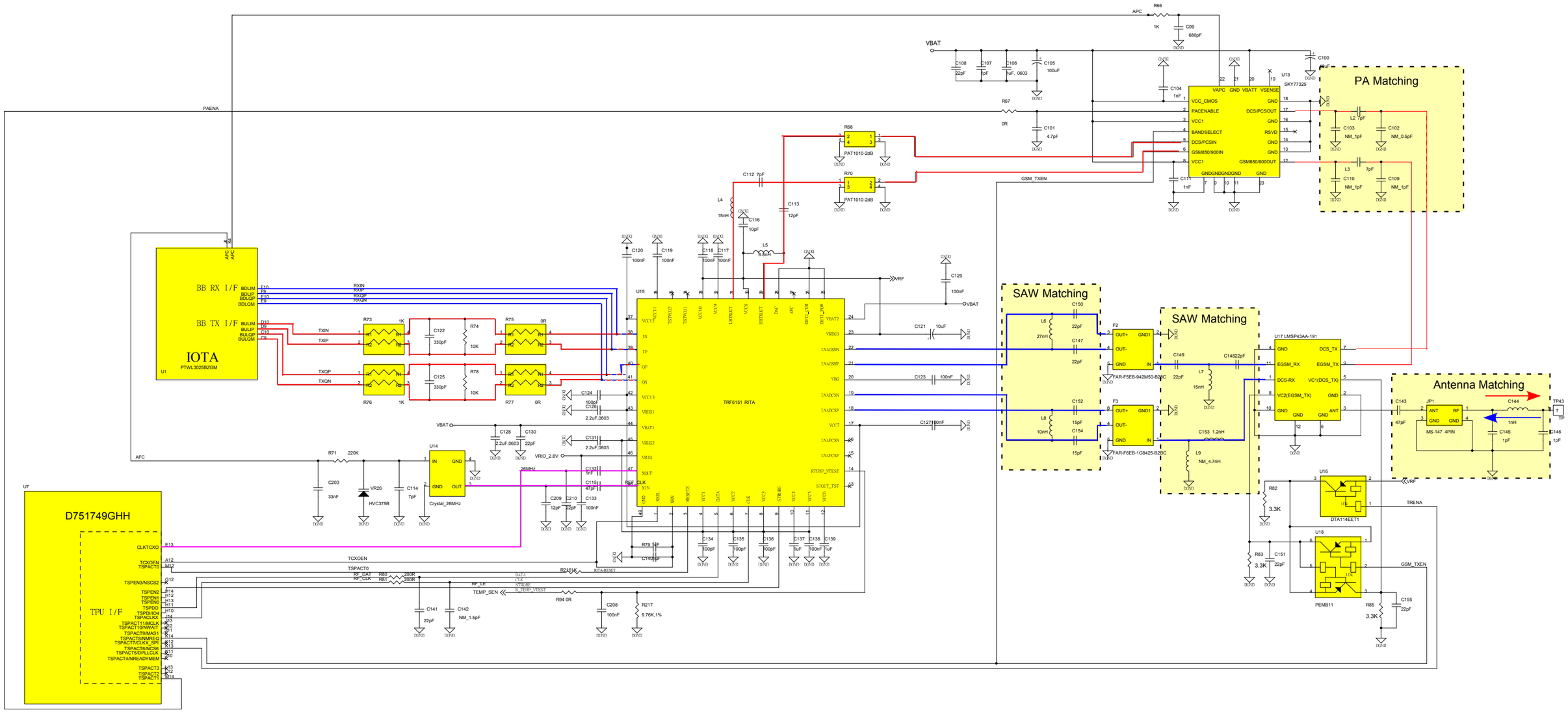

C139 EU Band

Service Engineering & Optimization
Level 3 Authorized

	2005.8.16
Level 3 Schematics	Rev.1.0
C139 EU band	
Mandy Chen	Page2of2